BHDP - Ref. BHDP

R118

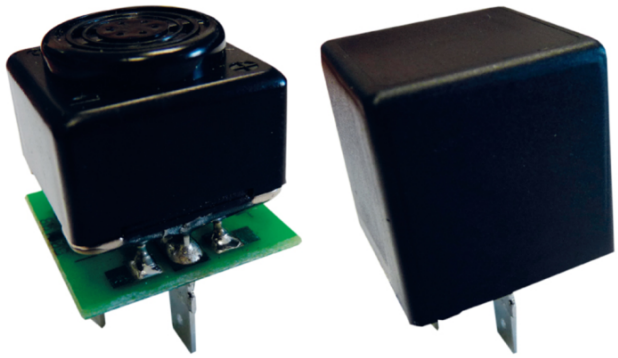

Are you looking for an **interior buzzer to generate sounds** in order to indicate door opening and closing in a passenger vehicle? Are you looking for an R118 approved sound solution for coaches and buses? Go for BHDP! BHDP is an indoor buzzer for opening doors supplied by SESALY. It complies with **ECE R118 (smoke fires) regulations.**This interior sound signaling solution offers many benefits:

- It works with a operating voltage of 24Vdc
- Its consumption is very low, only 0.025A.
- Its sound power is 90 db. *
- Its single tone activates when power is turned on.
- It is connected with 3 6.35 tongues: 2 for the power supply and 1 for the polarizing slot.
- Its installation is realised with fitting is done on a standard relay socket.
- A cover (30mm x 30mm x 30mm) to reduce the sound level can be added on request (as an option).

** + / - 2dB at 100 mm*

TECHNICAL CHARACTERISTICS

Brand	SESALY
Product Type	Accessories
Voltage	24V
Amperage	0,025 AMP at 24V
Fixation	Fitting on standard relay socket
Options, upon request	(30 mm x 30 mm x 30 mm) cover to reduce sound level
Decibel	90 dB
Main Functions	Warning sound system for door opening and closing
ECE	R118
Industry	Buses and Coaches

BHDP - Ref. BHDP
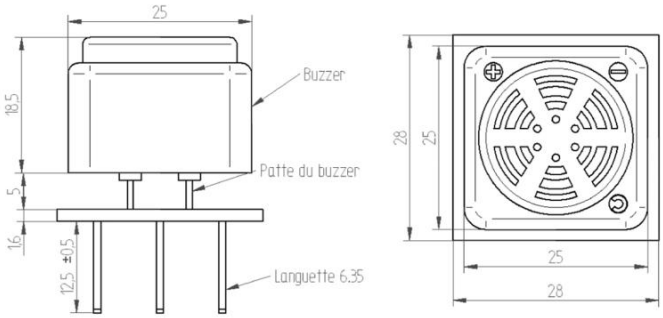
OTHER VISUALS